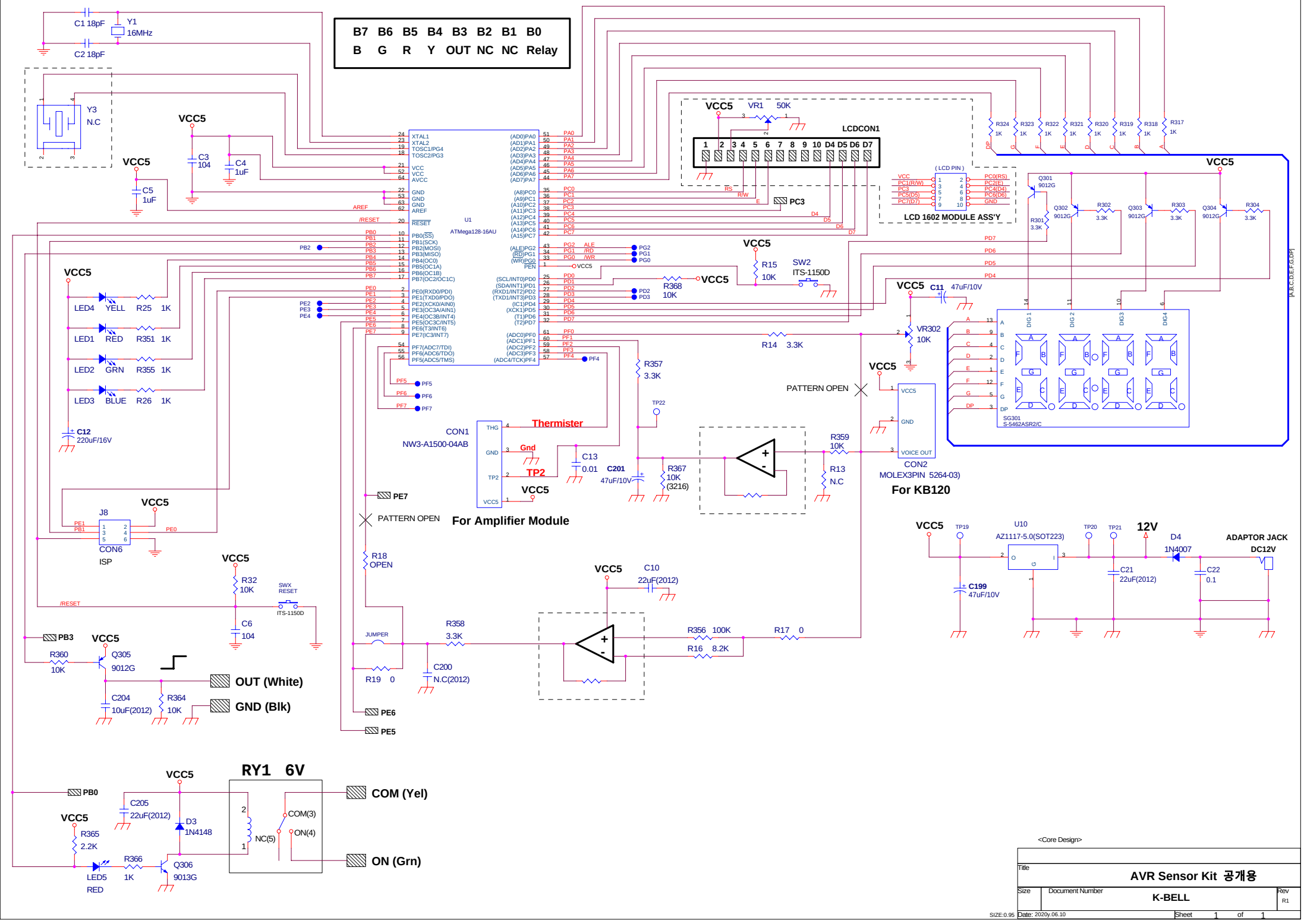
B7 B6 B5 B4 B3 B2 B1 B0
B G R Y OUT NC NC Relay
C1 18pF
Y1 16MHz
C2 18pF
Y3 N.C
VCC5
C3 104
C4 1uF
C5 1uF
U1
ATMega128-16AU
XTAL1
XTAL2
TOSC1/PG4
TOSC2/PG3
VCC
GND
AREF
RESET
PB0(SS)
PB1(SCK)
PB2(MOSI)
PB3(MISO)
PB4(OC0)
PB5(OC1A)
PB6(OC1B)
PB7(OC2/OC1C)
PE0(RXD0/PDI)
PE1(TXD0/PDO)
PE2(XCK0/AIN0)
PE3(OC3A/AIN1)
PE4(OC3B/INT4)
PE5(OC3C/INT5)
PE6(T3/INT6)
PE7(IC3/INT7)
PF7(ADC7/TDI)
PF6(ADC6/TDO)
PF5(ADC5/TMS)
PF4(ADC4/TCK)
PA0 PA1 PA2 PA3 PA4 PA5 PA6 PA7
PC0 PC1 PC2 PC3 PC4 PC5 PC6 PC7
PD0 PD1 PD2 PD3 PD4 PD5 PD6 PD7
PG2 PG1 PG0
ALE /RD /WR
/RESET
LED4 YELL R25 1K
LED1 RED R351 1K
LED2 GRN R355 1K
LED3 BLUE R26 1K
C12 220uF/16V
J8
CON6
ISP
R32 10K
SW/X RESET
ITS-1150D
C6 104
PB3
R360 10K
Q305 9012G
C204 10uF(2012)
R364 10K
OUT (White)
GND (Blk)
PB0
C205 22uF(2012)
D3 1N4148
R365 2.2K
R366 1K
Q306 9013G
LED5 RED
RY1 6V
COM(3)
NC(5)
ON(4)
COM (Yel)
ON (Yel)
CON1
NW3-A1500-04AB
THG
GND
TP2
VCC5
Thermister
Gnd
TP2
C13 0.01
C201 47uF/10V
R357 3.3K
TP22
R367 10K (3216)
R368 10K
PATTERN OPEN
For Amplifier Module
R18 OPEN
JUMPER
R19 0
R358 3.3K
C200 N.C(2012)
C10 22uF(2012)
R356 100K
R16 8.2K
R17 0
R359 10K
R13 N.C
CON2
MOLEX3PIN 5264-03)
For KB120
VR1 50K
LCDCON1
1 2 3 4 5 6 7 8 9 10 D4 D5 D6 D7
RS R/W E
PC3
LCD 1602 MODULE ASS'Y
R15 10K
SW2 ITS-1150D
C11 47uF/10V
VR302 10K
R14 3.3K
R324 1K R323 1K R322 1K R321 1K R320 1K R319 1K R318 1K R317 1K
Q301 9012G
Q302 9012G
Q303 9012G
Q304 9012G
R301 3.3K
R302 3.3K
R303 3.3K
R304 3.3K
DIG 1 DIG 2 DIG3 DIG4
SG301 S-5462ASR2/C
TP19
U10
AZ1117-5.0(SOT223)
TP20
TP21
12V
D4 1N4007
ADAPTOR JACK DC12V
C199 47uF/10V
C21 22uF(2012)
C22 0.1
<Core Design>
Title
AVR Sensor Kit 공개용
Size
Document Number
K-BELL
Rev
R1
SIZE:0.95
Date: 2020y.06.10
Sheet 1 of 1